Corner Mount Bracket

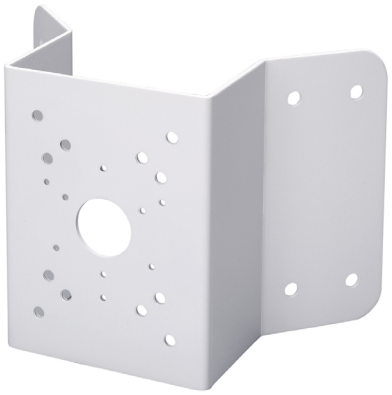

- SECC Construction
- Designed for Reliability and Aesthetics

Technical Specifications

Material	SECC
Color	White
Dimensions (W x H x D)	243.0 mm x 170.0 mm x 138.0 mm (9.57 in. x 6.69 in. x 5.43 in.)
Weight	1.70 kg (3.75 lb)
Load Bearing Capacity	10.0 kg (22.05 lb)
Operating Temperature	–40 °C to 60 °C (–40 °F to 140 °F)
Humidity	0% to 90% RH

Ordering Information

Type	Part Number	Description
Corner Mount	PFA151	Wall Mount Bracket, White
Package Contents	1	Corner Mount Bracket
	4	M8 x 25 Screws
	4	Metal Wall Anchors
	1	Hex Wrench

Dimensions (mm/in.)

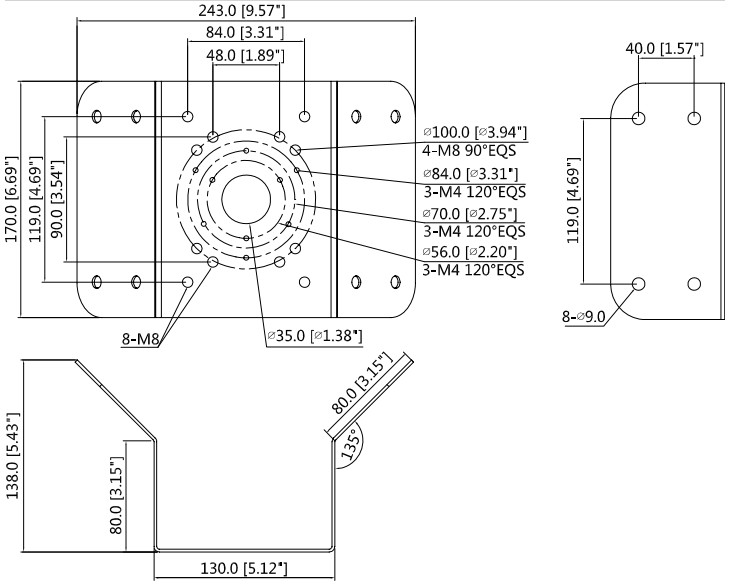

Rev 001.001 © 2019 Dahua. All rights reserved. Design and specifications are subject to change without notice.